HEAVEN

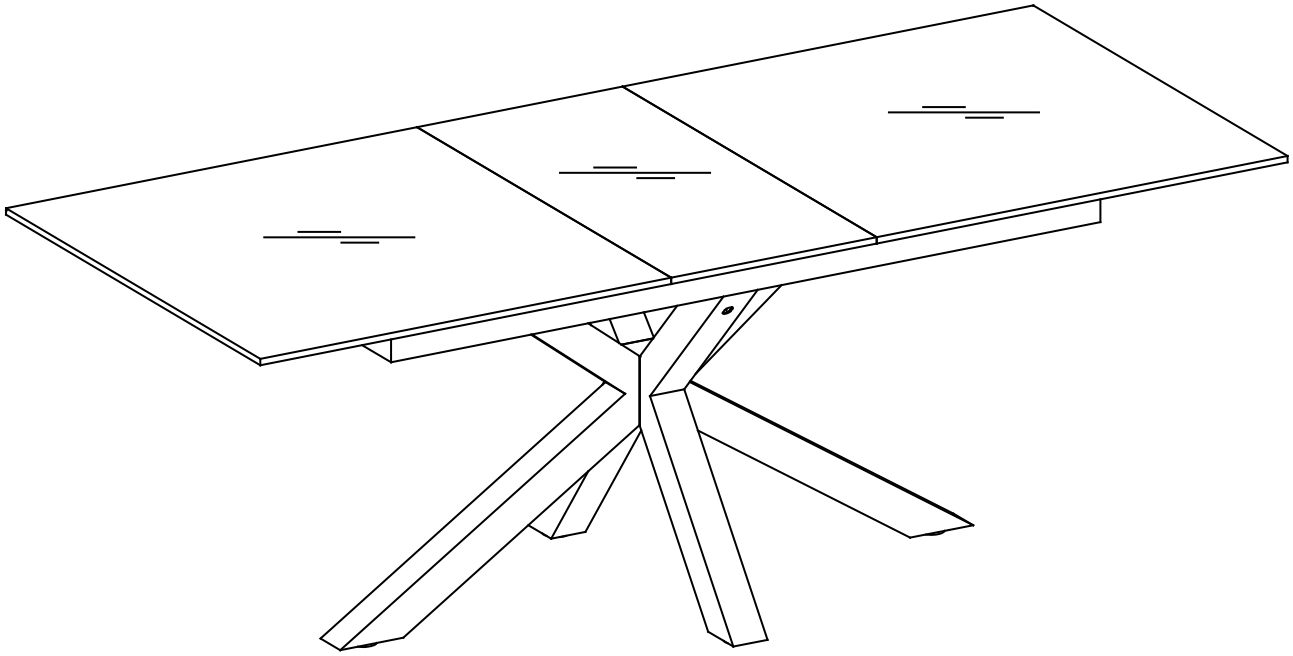

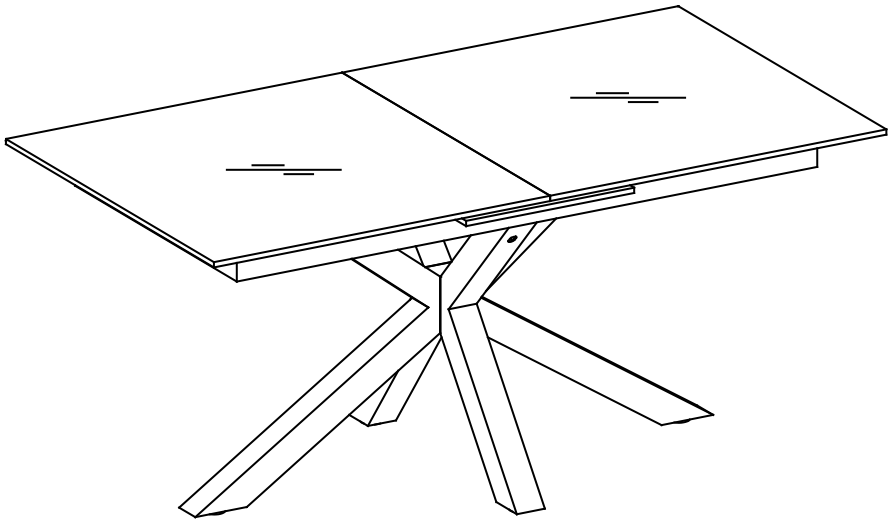

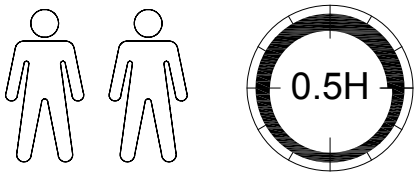

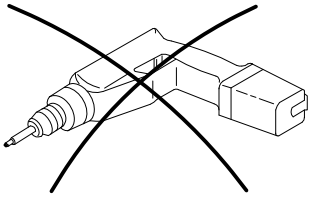

03/03/2022

			√
①	1	1680x900x100	
②	2	612x652x70	
③	2	331x652x70	
④	1	70x70x122	
⑤	1	69x69x3	
⑥	1	69x69x3	

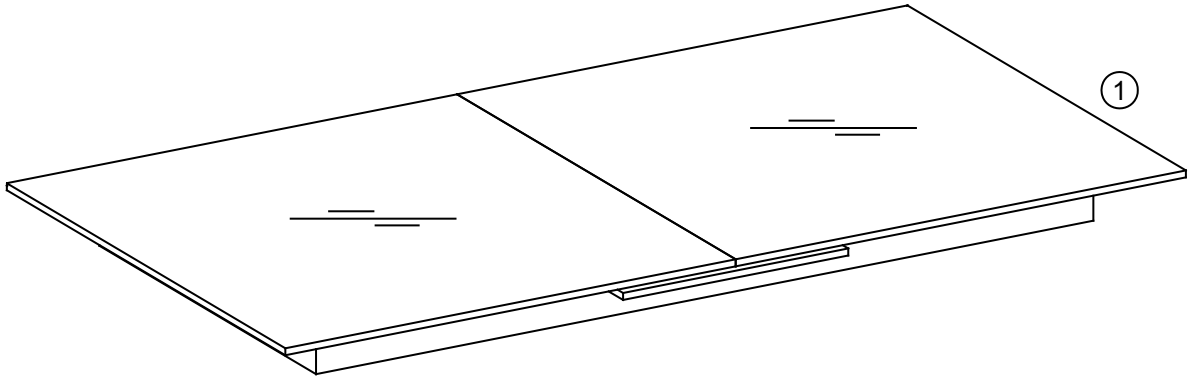

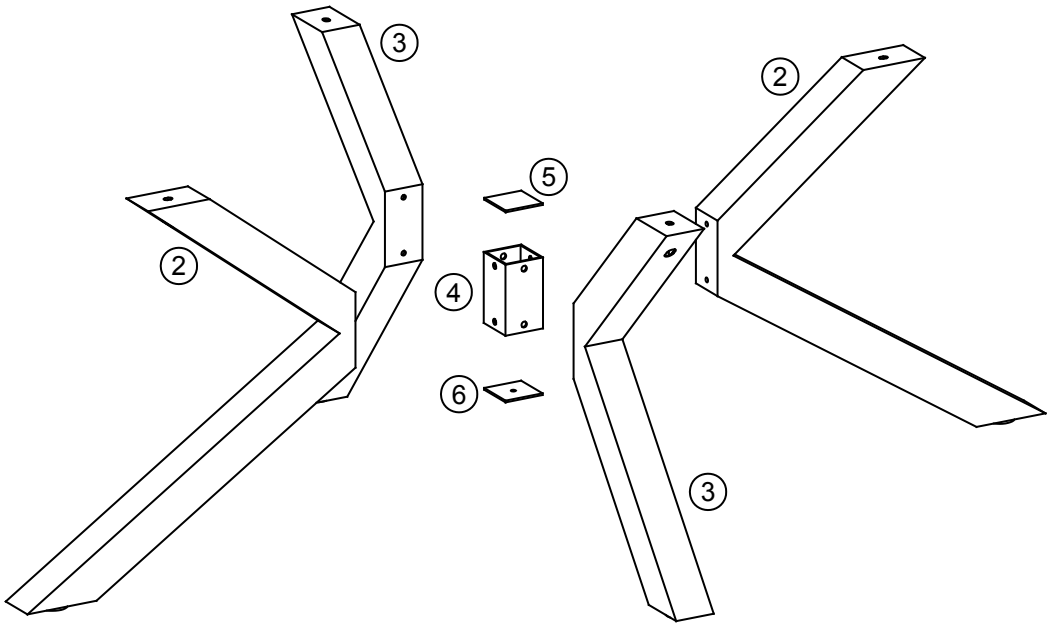

A x 1 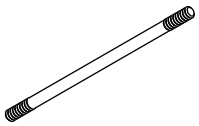 M6 x140 mm	B x 4 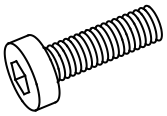 M8 x 35 mm	C x 8 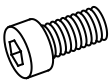 M8 x 20 mm	D x 1  M6/10 mm	E x 4 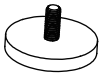 Ø50 x M8
F x 1 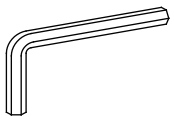 6 mm	G x 1  10 mm	H x 2  14 mm	J x 1  5 mm	K x 1  4 mm

1

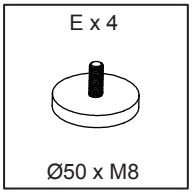

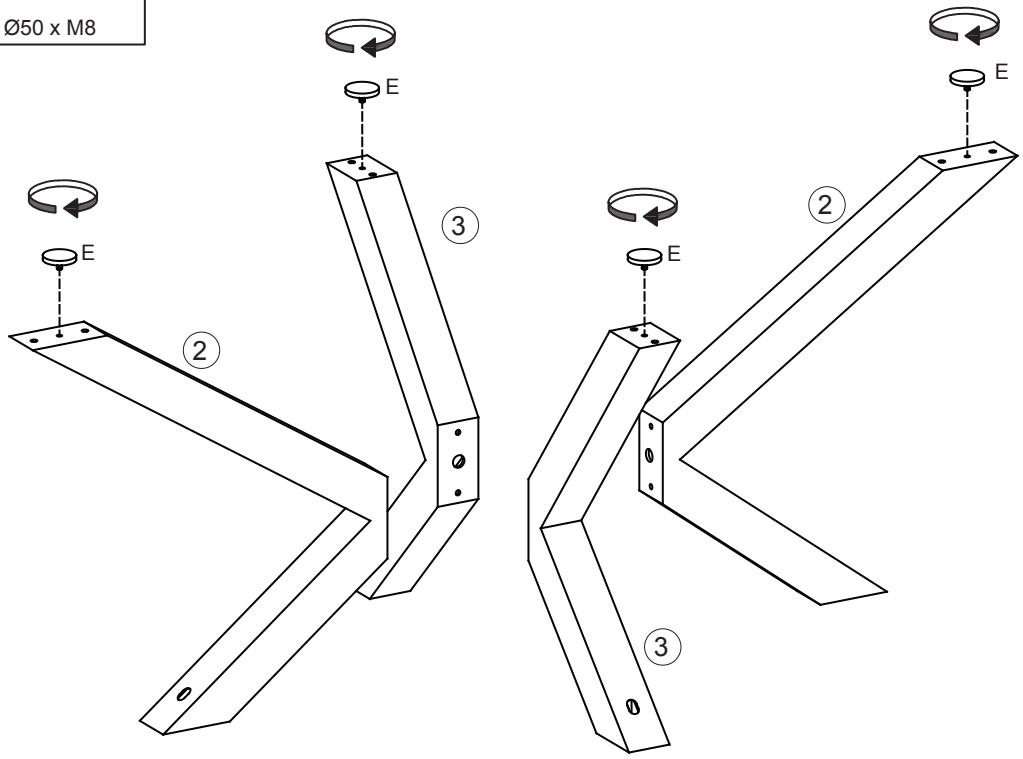

2

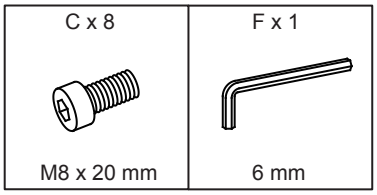

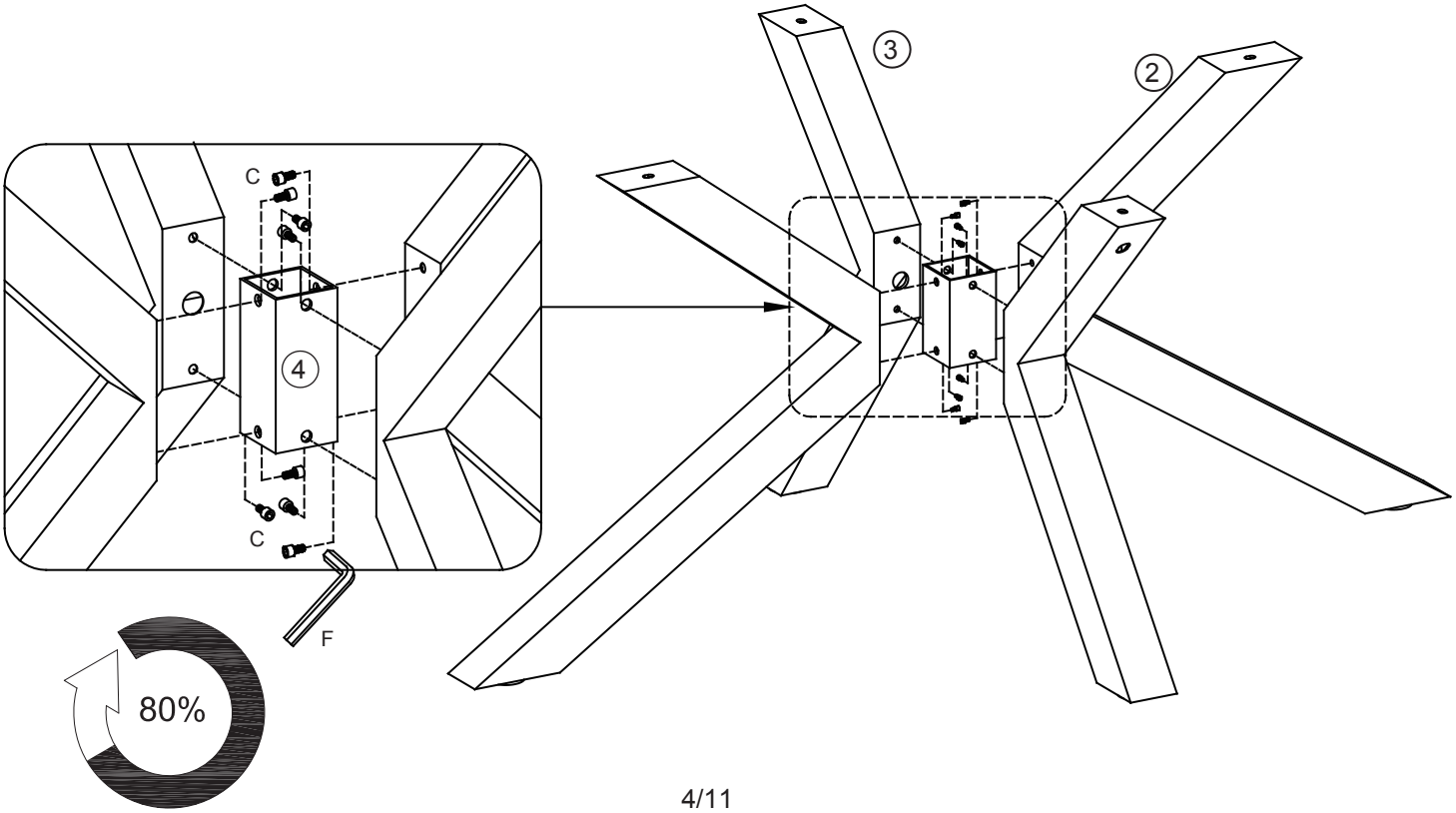

3

B x 4	J x 1
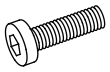	
M8 x 35 mm	5 mm

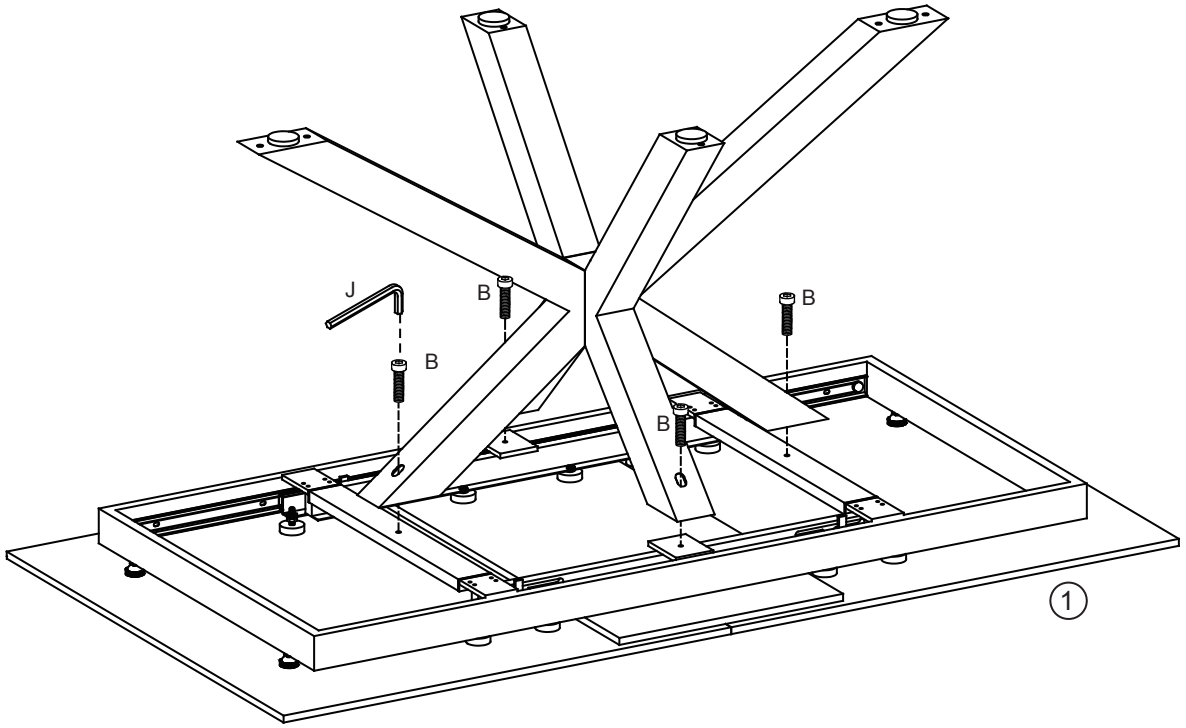

4

F x 1

6 mm

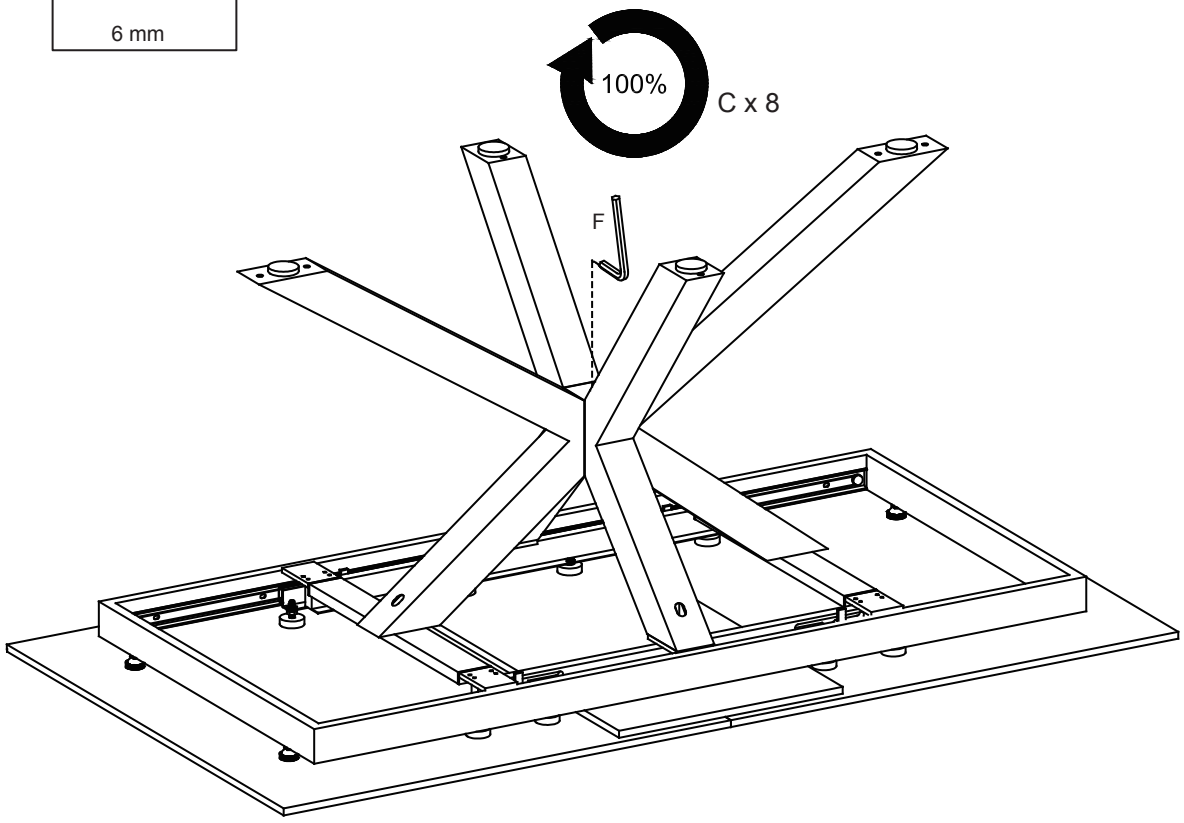

5

A x 1	D x 1	G x 1
		
M6 x 140 mm	M6/10 mm	10 mm

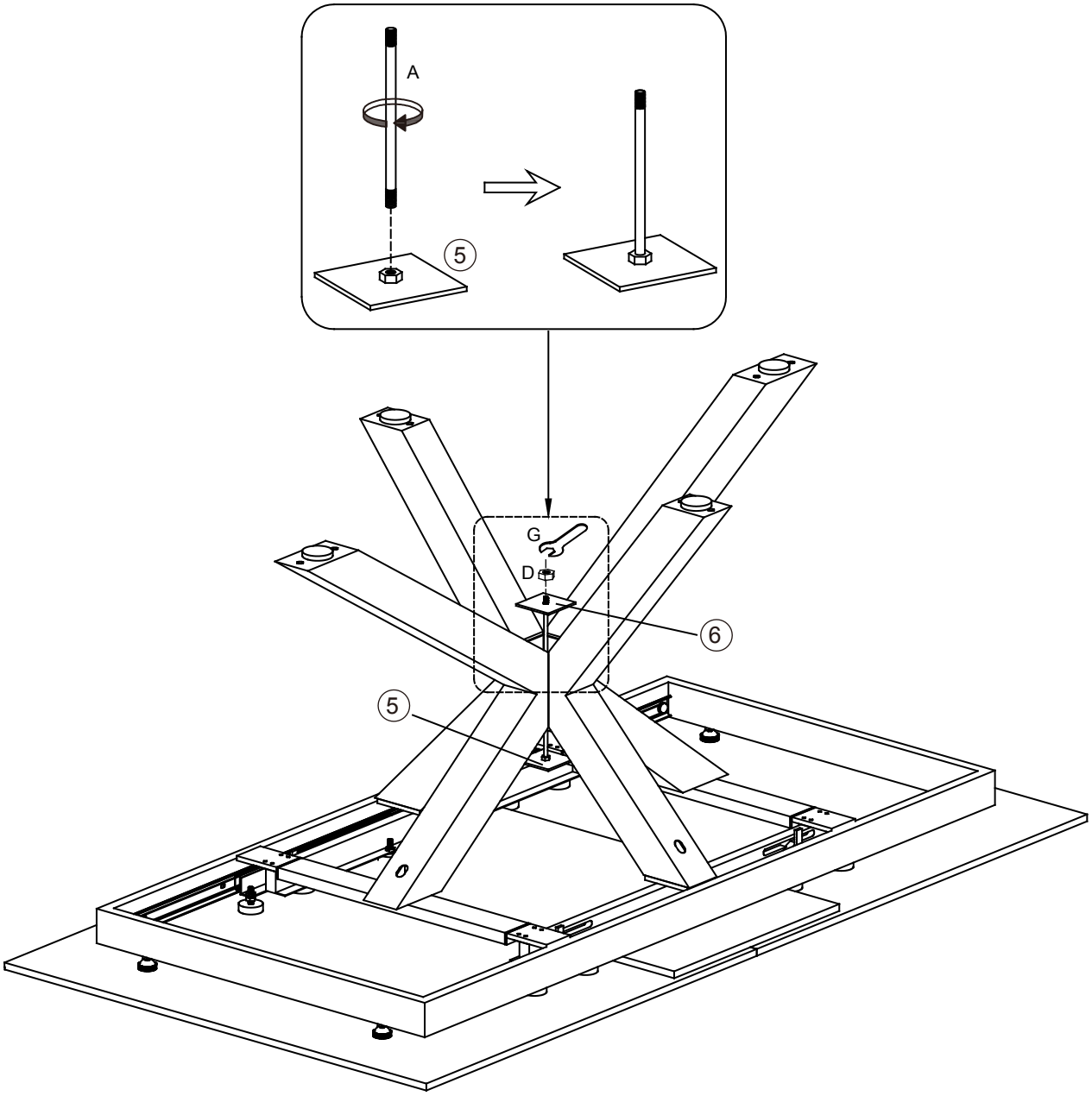

6

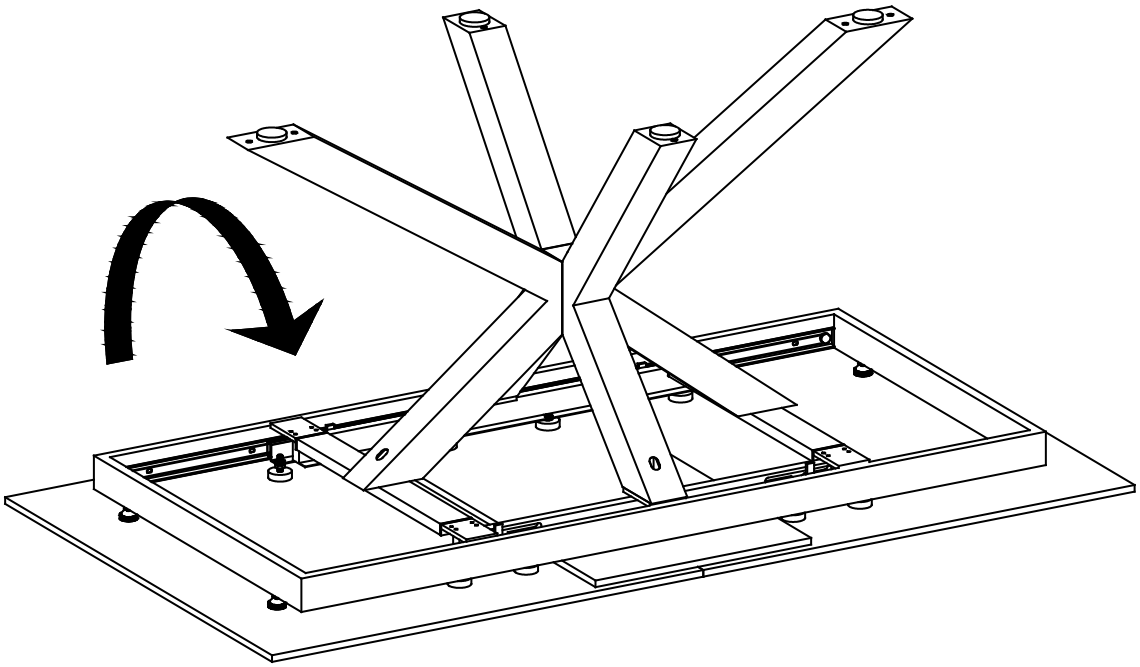

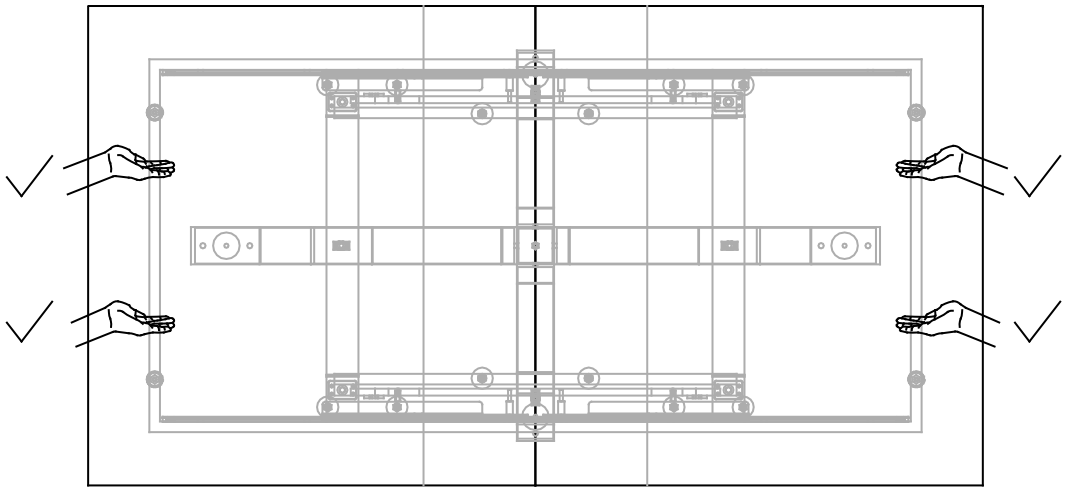

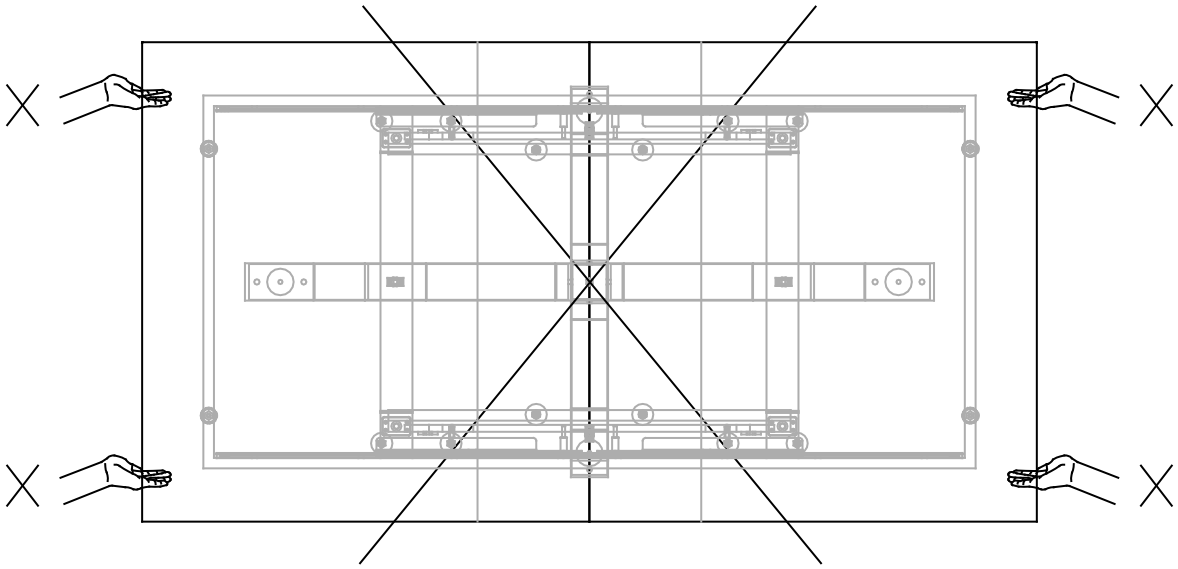

7

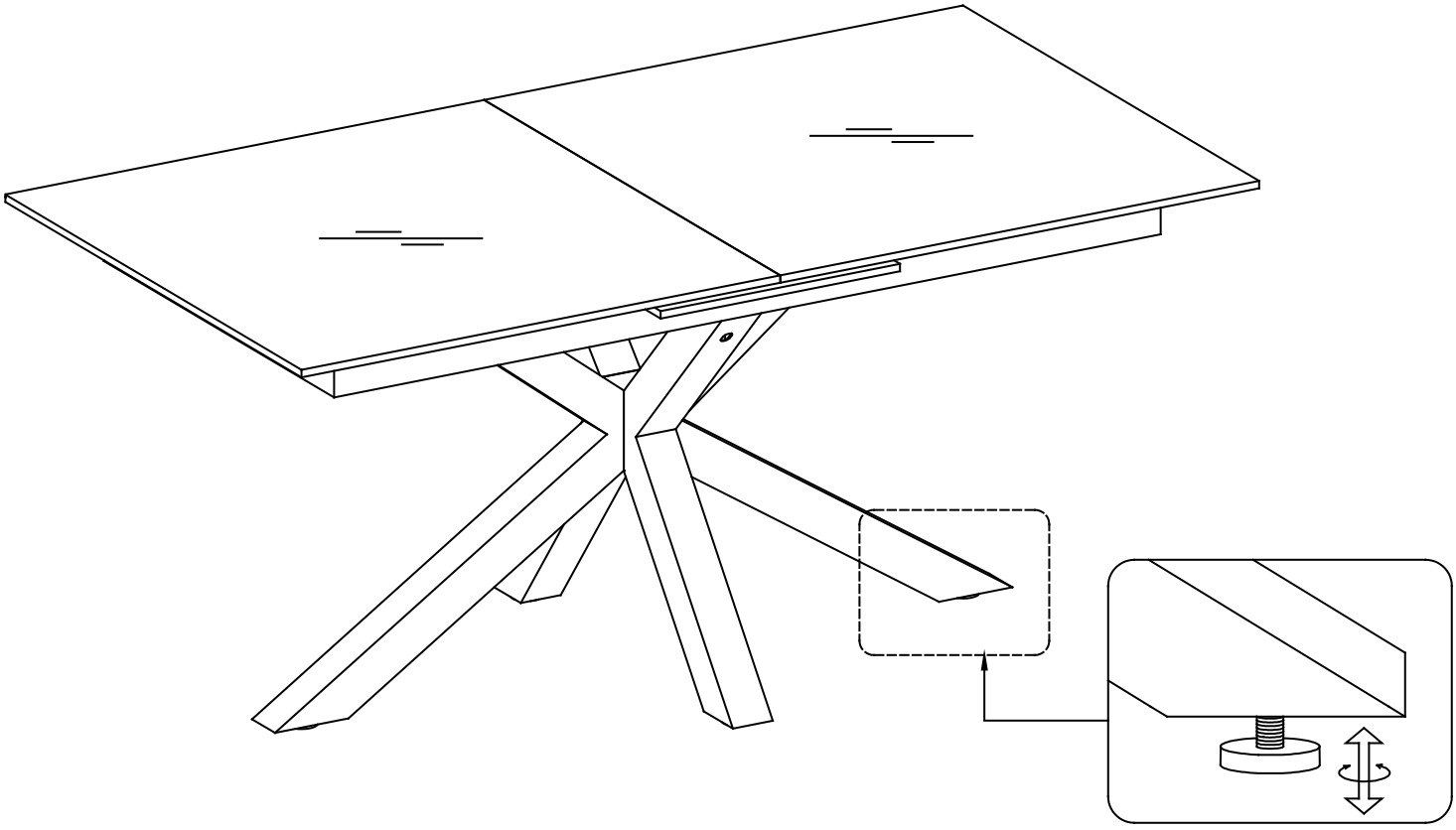

8

H x 2	K x 1
	
14 mm	4 mm

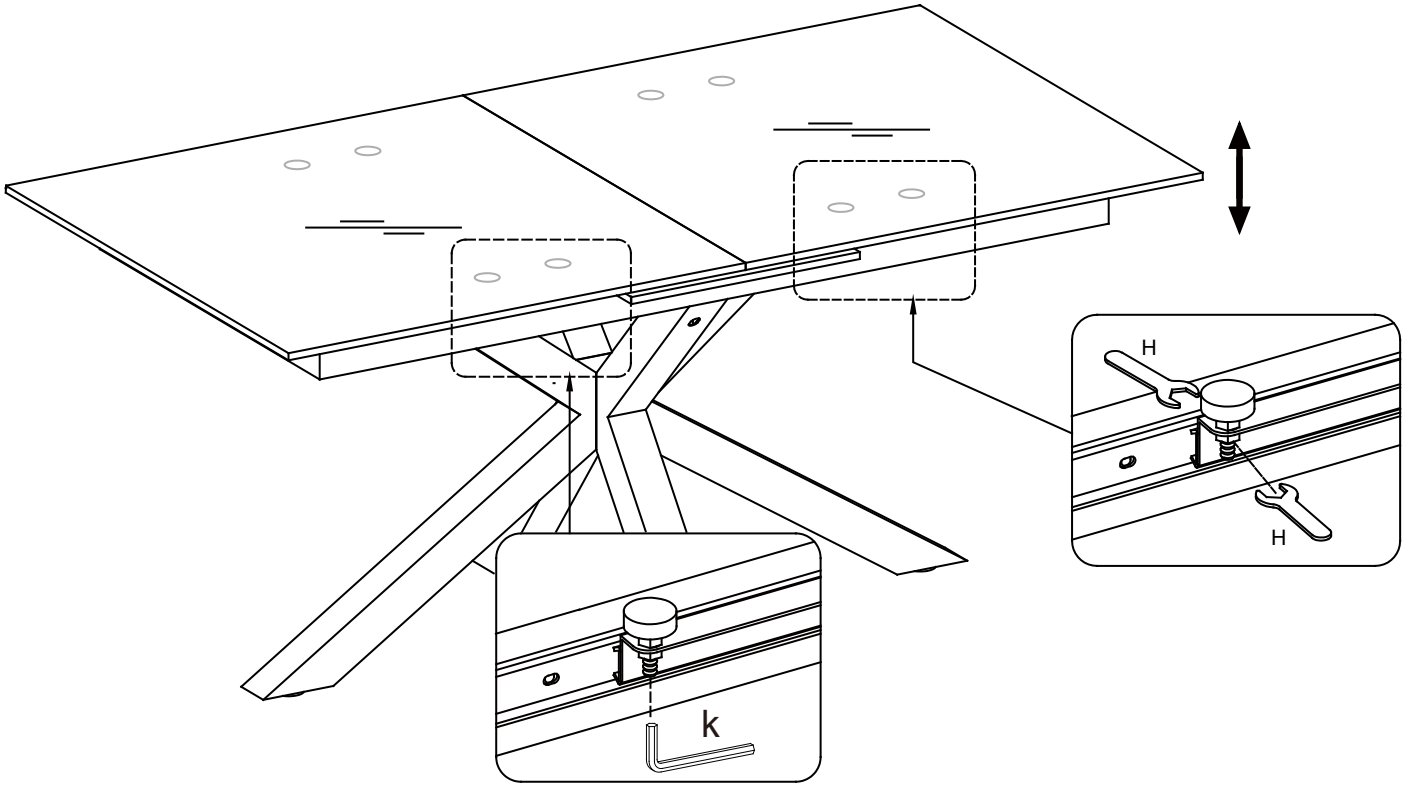

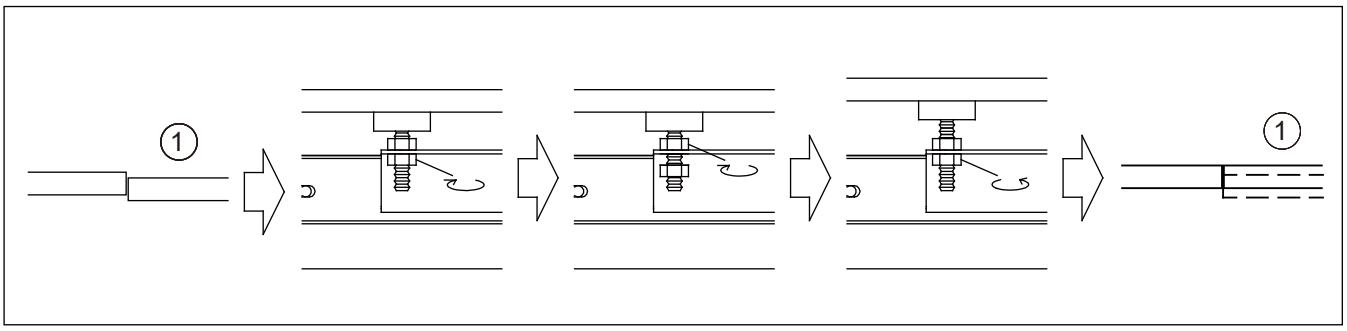

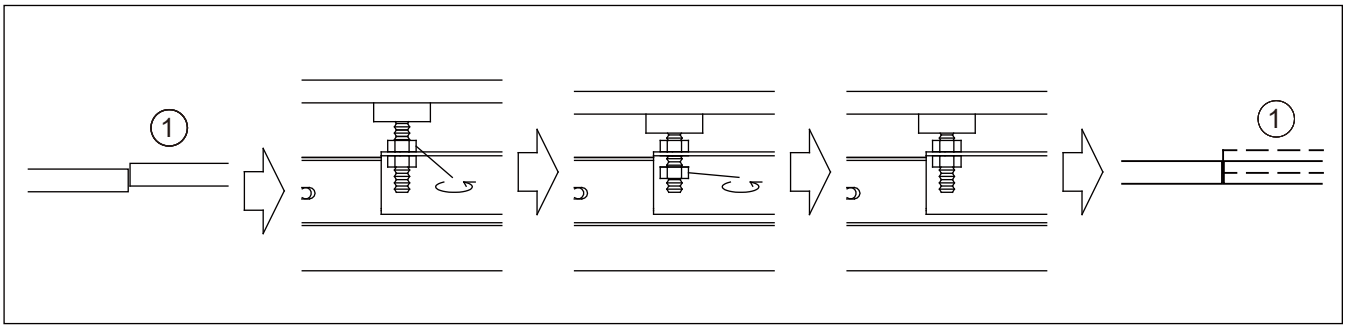

9

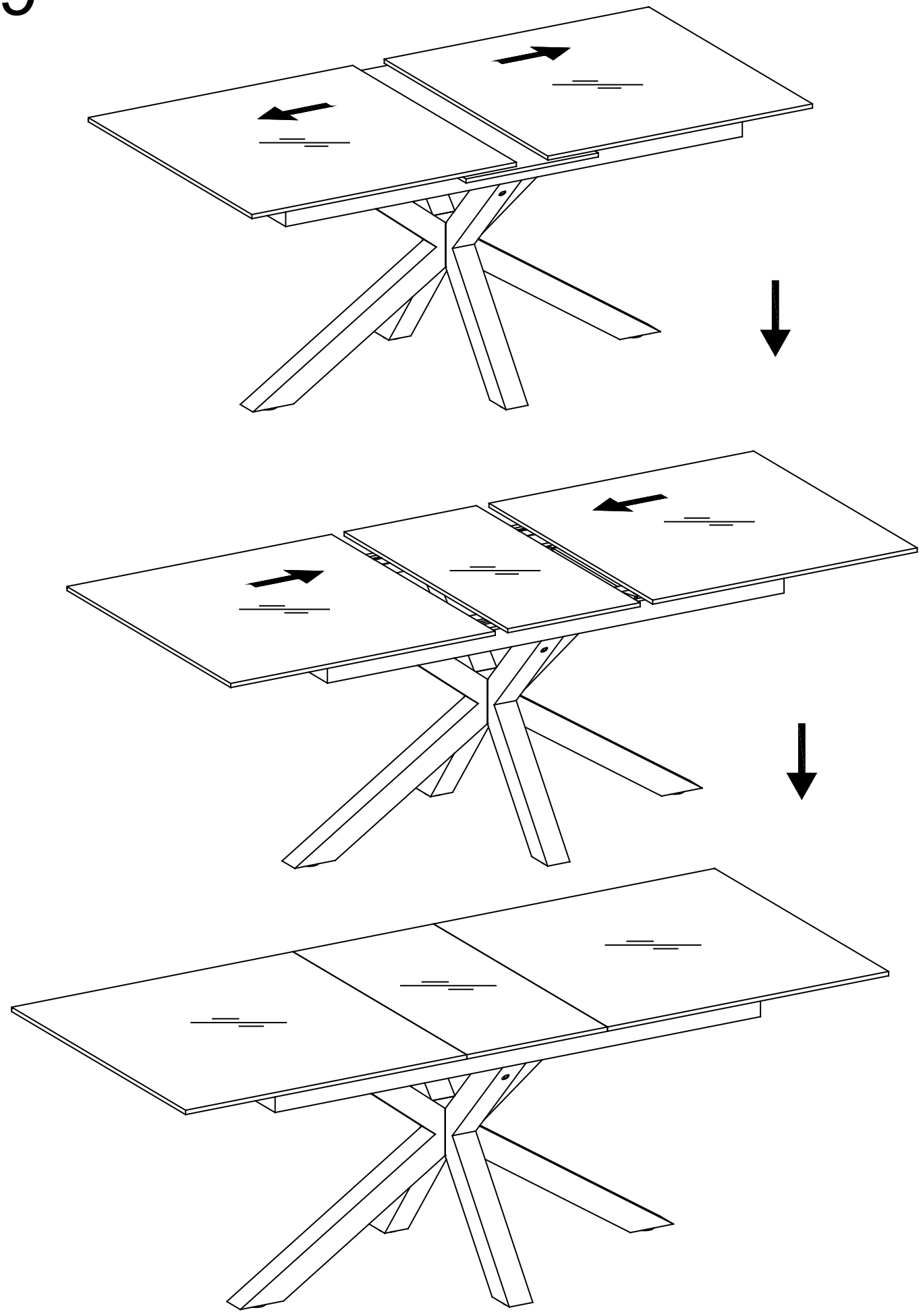

10

